KI1
Z1

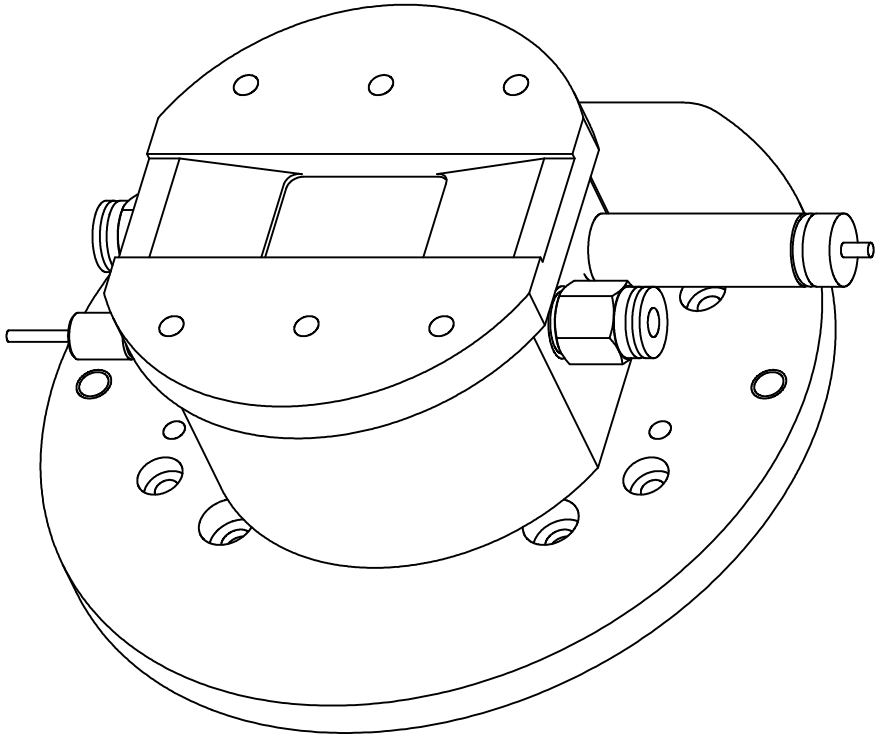

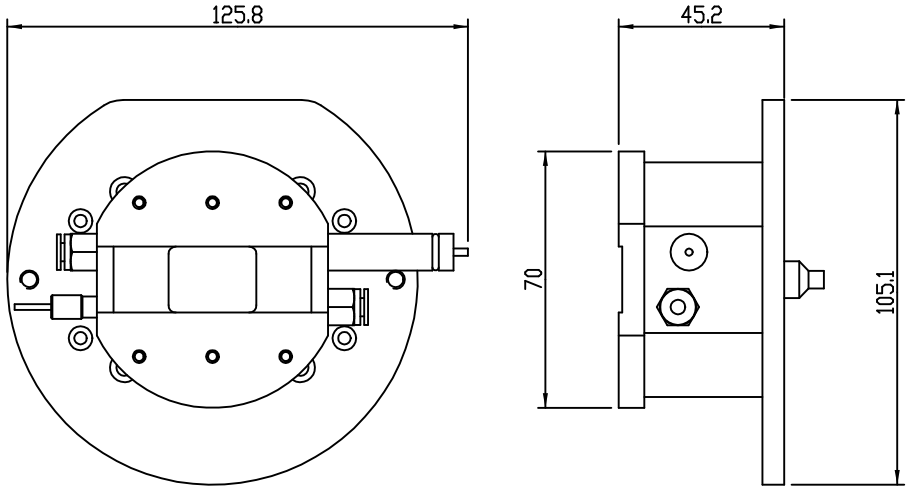

배율 1:2

SURFACE TEXTURE					Q'TY	
HEAT TREATMENT					1 EA	
SURFACE TREATMENT						
MATERIAL						
SYM.	NO.OF REV.	DESCRIPTION	EC.NO.	DATE	DESIGN	APPR

RELEASE OF DRAWING | SHEET

NO.	PART NAME	DRAWING NO.	MATERIAL	Q'TY	MAKER	MASS	REMARK

REF.DRAWING	PROJECT NO.	TITLE
PDC TECHNOLOGY	KIER	ISBC - FLOW TYPE

PROJECTION	UNIT	SCALE	TOLERANCE	NAME
	mm	1:1		CELL ASSY

SECTION	SYSTEM MACHINE DIV.	DRAWING NO.	SHEET NO.
		KI1-Z1	1/1

APPROVED			CADCHK		
DESIGNED			CHECKED	CHB	2024.11.20

CONFIDENTIAL A4 (297x210)mm